sales@atlcabinetry.com 770-685-1471 / 770-559-7593
3033 Adriatic Ct. Peachtree Corners, GA 30071 www.atlcabinetry.com

PRODUCT SPECIFICATIOBNS - Base Cabinets

TRAY BASE

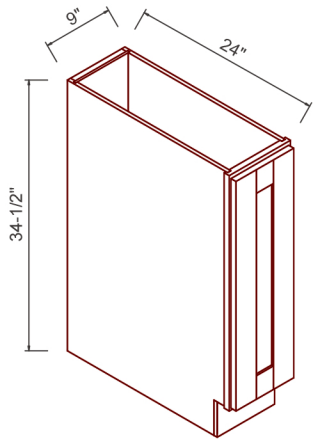

ITEM	DESCRIPTION	WIDTH	DEPTH	HEIGHT
BT9	Cabinet Dimension	9	24	34 1/2
	Door Dimension	8 5/8	3/4	29 5/8
	Note: Full high door base09 with 1 Adj. shelf.			

SINGLE DOOR SINGLE DRAWER BASES

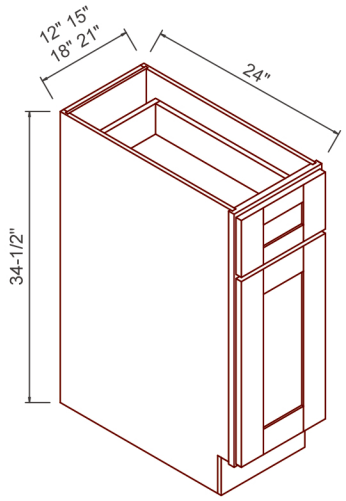

ITEM	DESCRIPTION	WIDTH	DEPTH	HEIGHT
B12	Cabinet Dimension	12	24	34 1/2
	Door Dimension	11 3/4	3/4	22 1/4
	Drawer Front	11 3/4	3/4	7 1/4
B15	Cabinet Dimension	15	24	34 1/2
	Door Dimension	14 3/4	3/4	22 1/4
	Drawer Front	14 3/4	3/4	7 1/4
B18	Cabinet Dimension	18	24	34 1/2
	Door Dimension	17 3/4	3/4	22 1/4
	Drawer Front	17 3/4	3/4	7 1/4
B21	Cabinet Dimension	21	24	34 1/2
	Door Dimension	20 3/4	3/4	22 1/4
	Drawer Front	20 3/4	3/4	7 1/4
	Note: 1 Adj. Shelf for B12-B21.			

Actual product specifications may vary.

sales@atlcabinetry.com 770-685-1471 / 770-559-7593
3033 Adriatic Ct. Peachtree Corners, GA 30071 www.atlcabinetry.com

PRODUCT SPECIFICATIOBNS - Base Cabinets

DOUBLE DOOR SINGLE DRAWER BASES

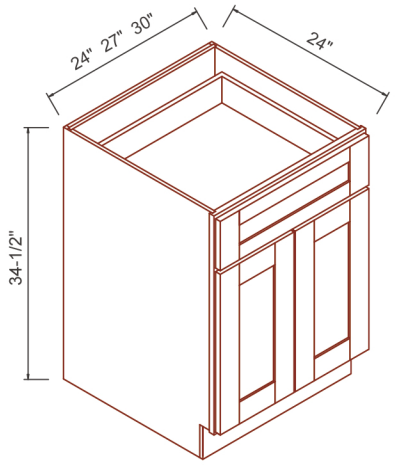

ITEM	DESCRIPTION	WIDTH	DEPTH	HEIGHT
B24	Cabinet Dimension	24	24	34 1/2
	Door Dimension	11 3/4	3/4	22 1/4
	Drawer Front	23 5/8	3/4	7 1/4
B27	Cabinet Dimension	27	24	34 1/2
	Door Dimension	13 7/32	3/4	22 1/4
	Drawer Front	26 5/8	3/4	7 1/4
B30	Cabinet Dimension	30	24	34 1/2
	Door Dimension	14 3/4	3/4	22 1/4
	Drawer Front	29 5/8	3/4	7 1/4

Note: 1 Adj. Shelf for B24-B30.

DOUBLE DOOR DOUBLE DRAWER BASES

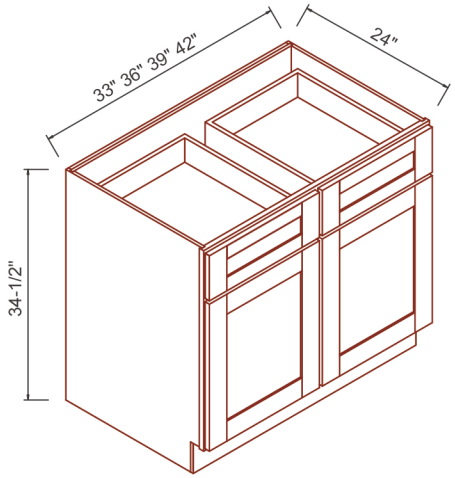

ITEM	DESCRIPTION	WIDTH	DEPTH	HEIGHT
B33	Cabinet Dimension	33	24	34 1/2
	Door Dimension	16 7/32	3/4	22 1/4
	Drawer Front	16 7/32	3/4	7 1/4
B36	Cabinet Dimension	36	24	34 1/2
	Door Dimension	17 3/4	3/4	22 1/4
	Drawer Front	17 3/4	3/4	7 1/4
B42	Cabinet Dimension	42	24	34 1/2
	Door Dimension	20 3/4	3/4	22 1/4
	Drawer Front	20 3/4	3/4	7 1/4

Note: 1 Adj. Shelf for B33-B42.

Actual product specifications may vary.

sales@atlcabinetry.com 770-685-1471 / 770-559-7593
3033 Adriatic Ct. Peachtree Corners, GA 30071 www.atlcabinetry.com

PRODUCT SPECIFICATIOBNS - Drawer Base Cabinets

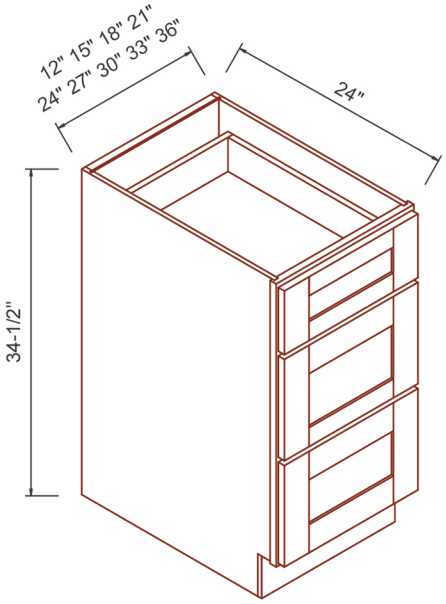

THREE DRAWER BASES				
ITEM	DESCRIPTION	WIDTH	DEPTH	HEIGHT
DB12-3	Cabinet Dimension	12	24	34 1/2
	Top Drawer Front	11 3/4	3/4	7 1/4
	Bottom Drawer Front	11 3/4	3/4	11 1/32
DB15-3	Cabinet Dimension	15	24	34 1/2
	Top Drawer Front	14 3/4	3/4	7 1/4
	Bottom Drawer Front	14 3/4	3/4	11 1/32
DB18-3	Cabinet Dimension	18	24	34 1/2
	Top Drawer Front	17 3/4	3/4	7 1/4
	Bottom Drawer Front	17 3/4	3/4	11 1/32
DB21-3	Cabinet Dimension	21	24	34 1/2
	Top Drawer Front	20 3/4	3/4	7 1/4
	Bottom Drawer Front	20 3/4	3/4	11 1/32
DB24-3	Cabinet Dimension	24	24	34 1/2
	Top Drawer Front	23 5/8	3/4	7 1/4
	Bottom Drawer Front	23 5/8	3/4	11 1/32
DB27-3	Cabinet Dimension	27	24	34 1/2
	Top Drawer Front	26 5/8	3/4	7 1/4
	Bottom Drawer Front	26 5/8	3/4	11 1/32
DB30-3	Cabinet Dimension	30	24	34 1/2
	Top Drawer Front	29 5/8	3/4	7 1/4
	Bottom Drawer Front	29 5/8	3/4	11 1/32
DB33-3	Cabinet Dimension	33	24	34 1/2
	Top Drawer Front	32 5/8	3/4	7 1/4
	Bottom Drawer Front	32 5/8	3/4	11 1/32
DB36-3	Cabinet Dimension	36	24	34 1/2
	Top Drawer Front	35 5/8	3/4	7 1/4
	Bottom Drawer Front	35 5/8	3/4	11 1/32

Actual product specifications may vary.

sales@atlcabinetry.com 770-685-1471 / 770-559-7593
3033 Adriatic Ct. Peachtree Corners, GA 30071 www.atlcabinetry.com

PRODUCT SPECIFICATIOBNS - Drawer Base Cabinets

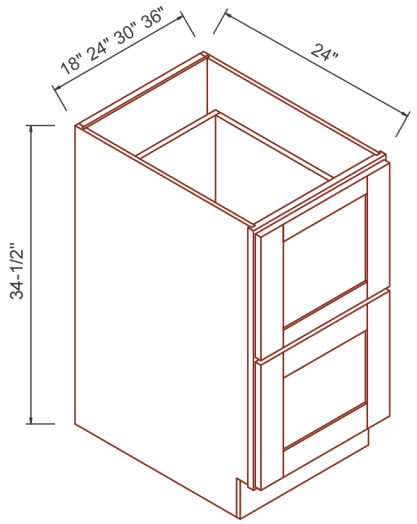

TWO DRAWER BASES				
ITEM	DESCRIPTION	WIDTH	DEPTH	HEIGHT
2DB24	Cabinet Dimension	24	24	34 1/2
	Top Drawer Front	23 5/8	3/4	14 5/8
	Bottom Drawer Front	23 5/8	3/4	14 5/8
2DB27	Cabinet Dimension	27	24	34 1/2
	Top Drawer Front	26 5/8	3/4	14 5/8
	Bottom Drawer Front	26 5/8	3/4	14 5/8
2DB30	Cabinet Dimension	30	24	34 1/2
	Top Drawer Front	29 5/8	3/4	14 5/8
	Bottom Drawer Front	29 5/8	3/4	14 5/8

Actual product specifications may vary.

sales@atlcabinetry.com 770-685-1471 / 770-559-7593
3033 Adriatic Ct. Peachtree Corners, GA 30071 www.atlcabinetry.com

PRODUCT SPECIFICATIOBNS - Sink Base Cabinets

DOUBLE DOOR SINGLE DRAWER FACE SINK BASES

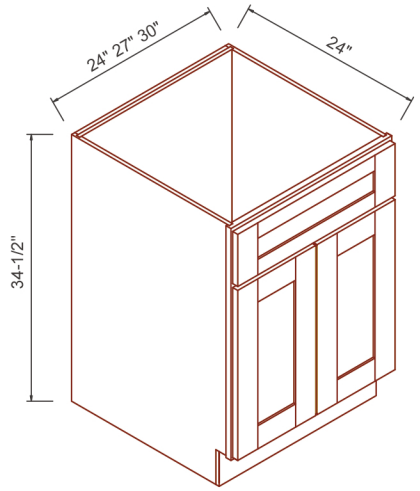

ITEM	DESCRIPTION	WIDTH	DEPTH	HEIGHT
SB30	Cabinet Dimension	30	24	34 1/2
	Door Dimension	14 3/4	3/4	22 1/4
	Drawer Front	29 5/8	3/4	7 1/4

DOUBLE DOOR DOUBLE DRAWER FACE SINK BASES

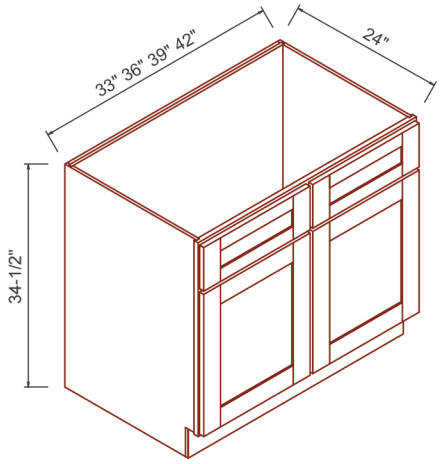

ITEM	DESCRIPTION	WIDTH	DEPTH	HEIGHT
SB33	Cabinet Dimension	33	24	34 1/2
	Door Dimension	16 7/32	3/4	22 1/4
	Drawer Front	16 7/32	3/4	7 1/4
SB36	Cabinet Dimension	36	24	34 1/2
	Door Dimension	17 3/4	3/4	22 1/4
	Drawer Front	17 3/4	3/4	7 1/4
SB42	Cabinet Dimension	42	24	34 1/2
	Door Dimension	20 3/4	3/4	22 1/4
	Drawer Front	20 3/4	3/4	7 1/4

Actual product specifications may vary.

sales@atlcabinetry.com 770-685-1471 / 770-559-7593
3033 Adriatic Ct. Peachtree Corners, GA 30071 www.atlcabinetry.com

PRODUCT SPECIFICATIOBNS - Base Cabinets

CORNER SINK BASES

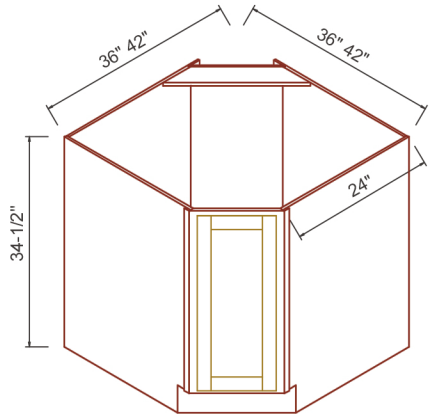

ITEM	DESCRIPTION	WIDTH	DEPTH	HEIGHT
CSB36	Cabinet Dimension	36	24	34 1/2
	Door Dimension	29 5/8 H	3/4	15 13/32 W
CSB42	Cabinet Dimension	42	24	34 1/2
	Door Dimension	29 5/8 H	3/4	23 7/32 W

FARM SINK BASES

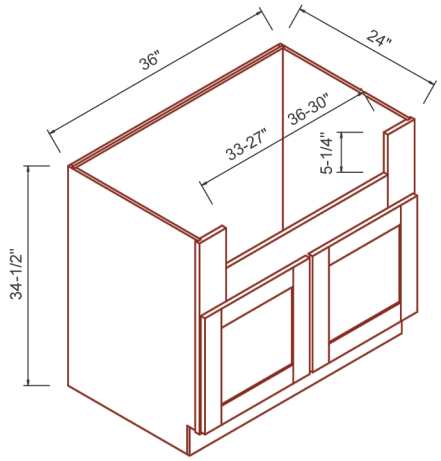

ITEM	DESCRIPTION	WIDTH	DEPTH	HEIGHT
FSB36	Cabinet Dimension	36	24	34 1/2
	Door Dimension	17 3/4	3/4	18 1/4

Actual product specifications may vary.

sales@atlcabinetry.com 770-685-1471 / 770-559-7593
3033 Adriatic Ct. Peachtree Corners, GA 30071 www.atlcabinetry.com

PRODUCT SPECIFICATIOBNS - Base Corner Cabinets

LAZY SUSAN BASES WITH SHELF

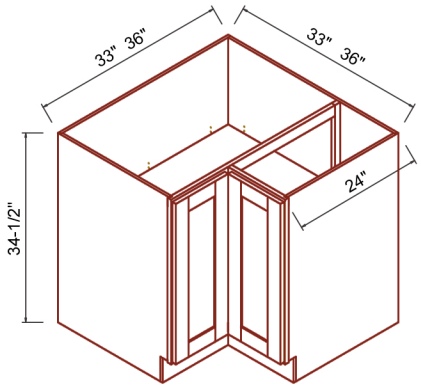

ITEM	DESCRIPTION	WIDTH	DEPTH	HEIGHT
LSB33	Cabinet Dimension	33	24	34 1/2
	Door Dimension	7 3/16	3/4	29 5/8
LSB36	Cabinet Dimension	36	24	34 1/2
	Door Dimension	10 3/16	3/4	29 5/8

Note: 1 Adj. Shelf for BER33-BER36.

LAZY SUSUAN TURN TABLE FOR BER33&BER36

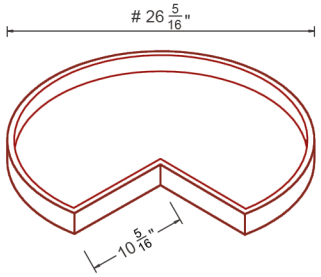

ITEM	DESCRIPTION	WIDTH	DEPTH	HEIGHT
BER-B	Diameter Dimension	26 5/16		
	Diameter Dimension	26 5/16		

BASE END OPEN SHELF

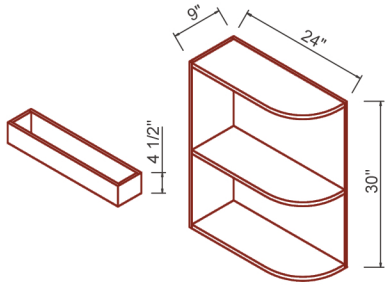

ITEM	DESCRIPTION	WIDTH	DEPTH	HEIGHT
BES09	Cabinet Dimension	9	24	34 1/2

Actual product specifications may vary.

sales@atlcabinetry.com 770-685-1471 / 770-559-7593
3033 Adriatic Ct. Peachtree Corners, GA 30071 www.atlcabinetry.com

PRODUCT SPECIFICATIOBNS - Base Cabinets

SPICE RACK BASE

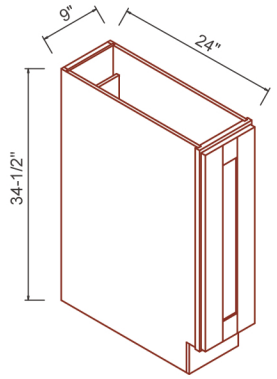

ITEM	DESCRIPTION	WIDTH	DEPTH	HEIGHT
SPB6	Cabinet Dimension	6	24	34 1/2
	Door Dimension	5 5/8	3/4	29 5/8
SPB9	Cabinet Dimension	9	24	34 1/2
	Door Dimension	8 5/8	3/4	29 5/8

WASTE BASKET BASE

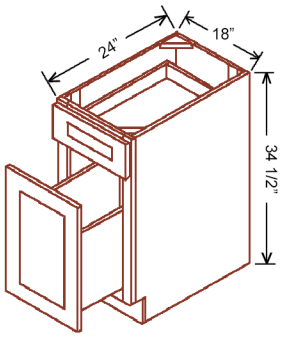

ITEM	DESCRIPTION	WIDTH	DEPTH	HEIGHT
BWBK18-2A	Cabinet Dimension	18	24	34 1/2
	Top Drawer Front	17 3/4	3/4	7 1/4
	Bottom Drawer Front	17 3/4	3/4	22 1/4

BASE END CABINET

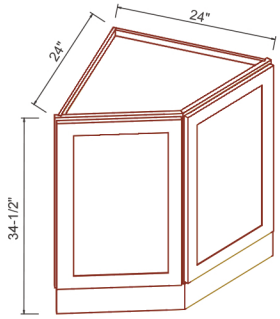

ITEM	DESCRIPTION	WIDTH	DEPTH	HEIGHT
BEC24	Cabinet Dimension	24	24	34 1/2
	Door Dimension	18 3/8	3/4	29 5/8
	Note: 1 Adj. Shelf for BEC24.			

Actual product specifications may vary.

sales@atlcabinetry.com 770-685-1471 / 770-559-7593
3033 Adriatic Ct. Peachtree Corners, GA 30071 www.atlcabinetry.com

PRODUCT SPECIFICATIOBNS - Base Cabinets

MICROWAVE BASE CABINET					
	ITEM	DESCRIPTION	WIDTH	DEPTH	HEIGHT
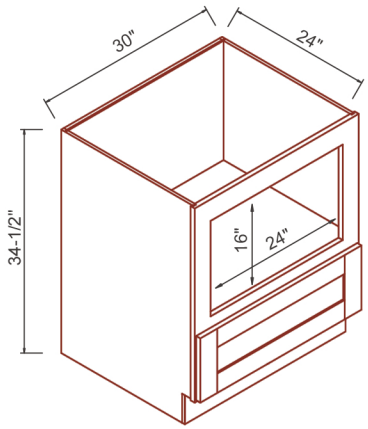	MB30	Cabinet Dimension	30	24	34 1/2
		Rout Out	24	24	16
		Drawer Front	29 5/8	3/4	9

Actual product specifications may vary.

sales@atlcabinetry.com 770-685-1471 / 770-559-7593
3033 Adriatic Ct. Peachtree Corners, GA 30071 www.atlcabinetry.com

PRODUCT SPECIFICATIOBNS - Oven Cabinets

OVEN CABINETS WITH THREE DRAWERS

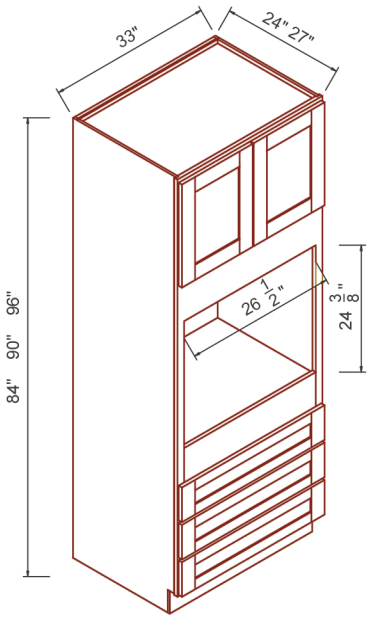

ITEM	DESCRIPTION	WIDTH	DEPTH	HEIGHT
0338427	Cabinet Dimension	33	27	96
	Door Dimension	16 7/32	3/4	17
	Drawer Front	32 5/8	3/4	7 3/4
0339027	Cabinet Dimension	33	27	96
	Door Dimension	16 7/32	3/4	23
	Drawer Front	32 5/8	3/4	7 3/4
0339627	Cabinet Dimension	33	27	96
	Door Dimension	16 7/32	3/4	29
	Drawer Front	32 5/8	3/4	7 3/4

Note: Can be modified to accommodate a double/combo oven.

sales@atlcabinetry.com 770-685-1471 / 770-559-7593
3033 Adriatic Ct. Peachtree Corners, GA 30071 www.atlcabinetry.com

PRODUCT SPECIFICATIOBNS - Pantry Cabinets

WALL PANTRIES

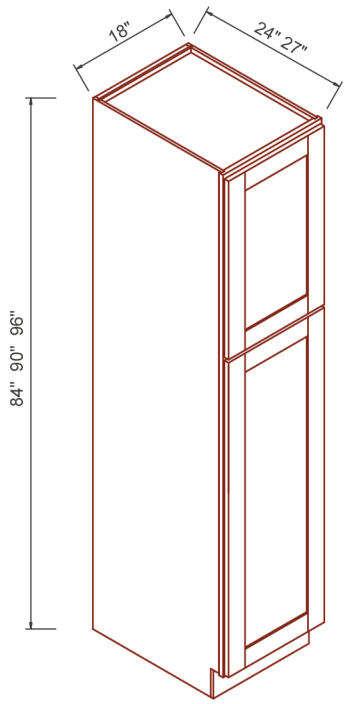

ITEM	DESCRIPTION	WIDTH	DEPTH	HEIGHT
U188424	Cabinet Dimension	18	24	84
	Top Door Dimension	17 3/4	3/4	29 5/8
	Bottom Door Dimension	17 3/4	3/4	49 3/8
U189027	Cabinet Dimension	18	27	90
	Top Door Dimension	17 3/4	3/4	35 5/8
	Bottom Door Dimension	17 3/4	3/4	49 3/8
U189627	Cabinet Dimension	18	27	96
	Top Door Dimension	17 3/4	3/4	41 5/8
	Bottom Door Dimension	17 3/4	3/4	49 3/8

Note: 4 Adj. Shelves for WP1884-WP1896.

sales@atlcabinetry.com 770-685-1471 / 770-559-7593
3033 Adriatic Ct. Peachtree Corners, GA 30071 www.atlcabinetry.com

PRODUCT SPECIFICATIOBNS - Pantry Cabinets

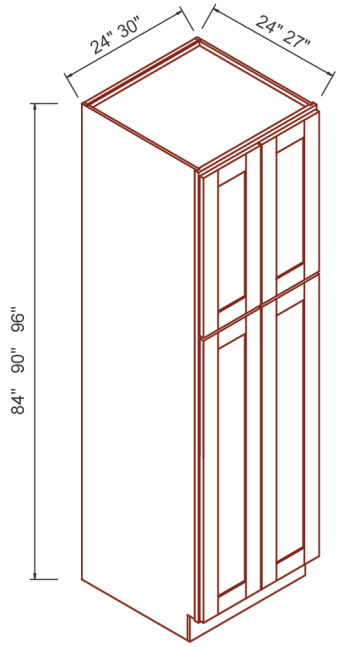

WALL PANTRIES				
ITEM	DESCRIPTION	WIDTH	DEPTH	HEIGHT
U248427	Cabinet Dimension	24	27	84
	Top Door Dimension	11 3/4	3/4	29 5/8
	Bottom Door Dimension	11 3/4	3/4	49 3/8
U249027	Cabinet Dimension	24	27	90
	Top Door Dimension	11 3/4	3/4	35 5/8
	Bottom Door Dimension	11 3/4	3/4	49 3/8
U249627	Cabinet Dimension	24	27	96
	Top Door Dimension	11 3/4	3/4	41 5/8
	Bottom Door Dimension	11 3/4	3/4	49 3/8
U308427	Cabinet Dimension	30	27	84
	Top Door Dimension	14 3/4	3/4	29 5/8
	Bottom Door Dimension	14 3/4	3/4	49 3/8
U309027	Cabinet Dimension	30	27	90
	Top Door Dimension	14 3/4	3/4	35 5/8
	Bottom Door Dimension	14 3/4	3/4	49 3/8
U309627	Cabinet Dimension	30	27	96
	Top Door Dimension	14 3/4	3/4	41 5/8
	Bottom Door Dimension	14 3/4	3/4	49 3/8

Note: 4 Adj. Shelves for WP2484-WP3096.

Actual product specifications may vary.

sales@atlcabinetry.com 770-685-1471 / 770-559-7593
3033 Adriatic Ct. Peachtree Corners, GA 30071 www.atlcabinetry.com

PRODUCT SPECIFICATIOBNS - Wall Cabinets

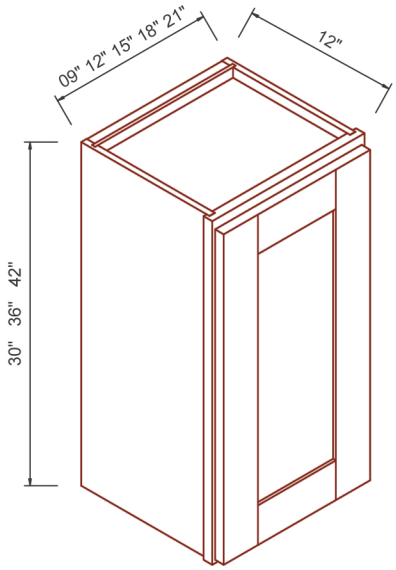

SINGLE DOOR WALL CABINETS				
ITEM	DESCRIPTION	WIDTH	DEPTH	HEIGHT
W0930	Cabinet Dimension	9	12	30
	Door Dimension	8 5/8	3/4	29 5/8
W1230	Cabinet Dimension	12	12	30
	Door Dimension	11 3/4	3/4	29 5/8
W1530	Cabinet Dimension	15	12	30
	Door Dimension	14 3/4	3/4	29 5/8
W1830	Cabinet Dimension	18	12	30
	Door Dimension	17 3/4	3/4	29 5/8
W2130	Cabinet Dimension	21	12	30
	Door Dimension	20 3/4	3/4	29 5/8
W0936	Cabinet Dimension	9	12	36
	Door Dimension	8 5/8	3/4	35 5/8
W1236	Cabinet Dimension	12	12	36
	Door Dimension	11 3/4	3/4	35 5/8
W1536	Cabinet Dimension	15	12	36
	Door Dimension	14 3/4	3/4	35 5/8
W1836	Cabinet Dimension	18	12	36
	Door Dimension	17 3/4	3/4	35 5/8
W2136	Cabinet Dimension	21	12	36
	Door Dimension	20 3/4	3/4	35 5/8
W0942	Cabinet Dimension	9	12	42
	Door Dimension	8 5/8	3/4	41 5/8
W1242	Cabinet Dimension	12	12	42
	Door Dimension	11 3/4	3/4	41 5/8
W1542	Cabinet Dimension	15	12	42
	Door Dimension	14 3/4	3/4	41 5/8
W1842	Cabinet Dimension	18	12	42
	Door Dimension	17 3/4	3/4	41 5/8
W2142	Cabinet Dimension	21	12	42
	Door Dimension	20 3/4	3/4	41 5/8
Note: 30" H and 36" H cabinets with 2 Adj. Shelves; 42" H cabinets with 3 Adj Shelves.				

Actual product specifications may vary.

sales@atlcabinetry.com 770-685-1471 / 770-559-7593
3033 Adriatic Ct. Peachtree Corners, GA 30071 www.atlcabinetry.com

PRODUCT SPECIFICATIOBNS - Wall Cabinets

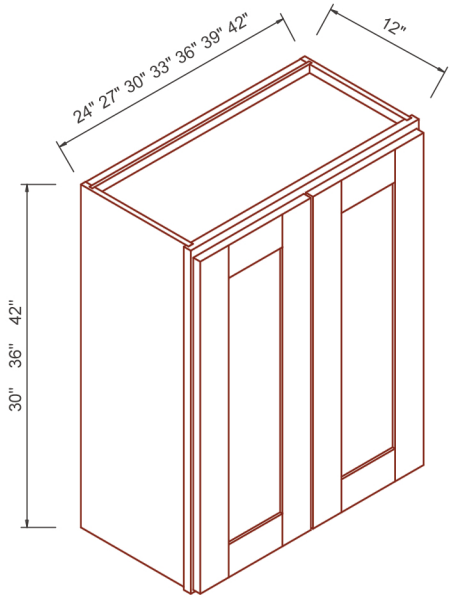

DOUBLE DOOR WALL CABINETS				
ITEM	DESCRIPTION	WIDTH	DEPTH	HEIGHT
W2430	Cabinet Dimension	24	12	30
	Door Dimension	11 3/4	3/4	29 5/8
W2730	Cabinet Dimension	27	12	30
	Door Dimension	13 1/4	3/4	29 5/8
W3030	Cabinet Dimension	30	12	30
	Door Dimension	14 3/4	3/4	29 5/8
W3330	Cabinet Dimension	33	12	30
	Door Dimension	16 1/4	3/4	29 5/8
W3630	Cabinet Dimension	36	12	30
	Door Dimension	17 3/4	3/4	29 5/8
W2436	Cabinet Dimension	24	12	36
	Door Dimension	11 3/4	3/4	35 5/8
W2736	Cabinet Dimension	27	12	36
	Door Dimension	13 1/4	3/4	35 5/8
W3036	Cabinet Dimension	30	12	36
	Door Dimension	14 3/4	3/4	35 5/8
W3336	Cabinet Dimension	33	12	36
	Door Dimension	16 1/4	3/4	35 5/8
W3636	Cabinet Dimension	36	12	36
	Door Dimension	17 3/4	3/4	35 5/8
Note: 30" H and 36" H cabinets with 2 Adj. Shelves; 42" H cabinets with 3 Adj Shelves.				

Actual product specifications may vary.

sales@atlcabinetry.com 770-685-1471 / 770-559-7593
3033 Adriatic Ct. Peachtree Corners, GA 30071 www.atlcabinetry.com

PRODUCT SPECIFICATIOBNS - Wall Cabinets

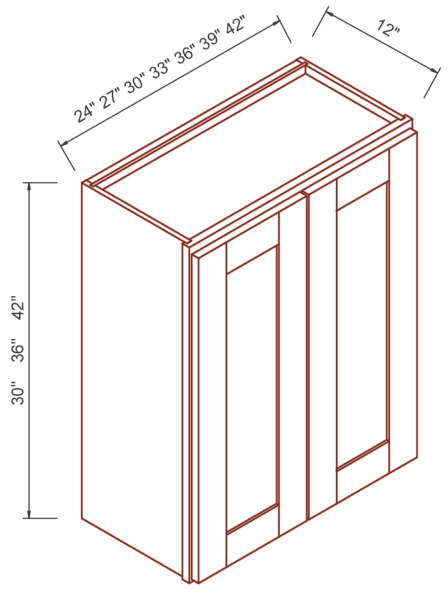

DOUBLE DOOR WALL CABINETS				
ITEM	DESCRIPTION	WIDTH	DEPTH	HEIGHT
W2442	Cabinet Dimension	24	12	42
	Door Dimension	11 3/4	3/4	41 5/8
W2742	Cabinet Dimension	27	12	42
	Door Dimension	13 1/4	3/4	41 5/8
W3042	Cabinet Dimension	30	12	42
	Door Dimension	14 3/4	3/4	41 5/8
W3342	Cabinet Dimension	33	12	42
	Door Dimension	16 1/4	3/4	41 5/8
W3642	Cabinet Dimension	36	12	42
	Door Dimension	17 3/4	3/4	41 5/8

Note: 30" H and 36" H cabinets with 2 Adj. Shelves; 42" H cabinets with 3 Adj Shelves.

Actual product specifications may vary.

sales@atlcabinetry.com 770-685-1471 / 770-559-7593
3033 Adriatic Ct. Peachtree Corners, GA 30071 www.atlcabinetry.com

PRODUCT SPECIFICATIOBNS - Wall Cabinets

DOUBLE DOOR WALL CABINETS

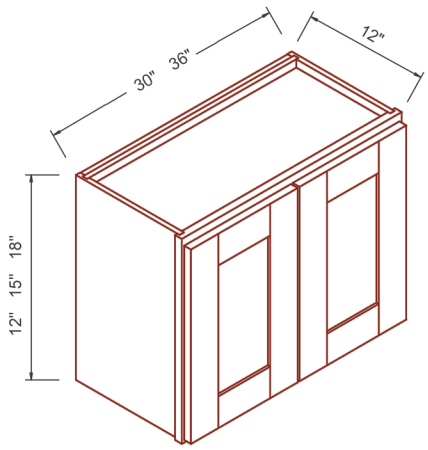

ITEM	DESCRIPTION	WIDTH	DEPTH	HEIGHT
W3012	Cabinet Dimension	30	12	12
	Door Dimension	14 3/4	3/4	11 5/8
W3015	Cabinet Dimension	30	12	15
	Door Dimension	14 3/4	3/4	14 5/8
W3018	Cabinet Dimension	30	12	18
	Door Dimension	14 3/4	3/4	17 5/8
W3612	Cabinet Dimension	36	12	12
	Door Dimension	17 3/4	3/4	11 5/8
W3615	Cabinet Dimension	36	12	15
	Door Dimension	17 3/4	3/4	14 5/8
W3618	Cabinet Dimension	36	12	18
	Door Dimension	17 3/4	3/4	17 5/8

DOUBLE DOOR WALL CABINETS

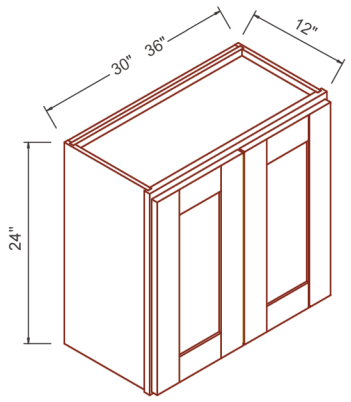

ITEM	DESCRIPTION	WIDTH	DEPTH	HEIGHT
W3024	Cabinet Dimension	30	12	24
	Door Dimension	14 3/4	3/4	23 5/8
W3624	Cabinet Dimension	36	12	24
	Door Dimension	17 3/4	3/4	23 5/8

Note: 24" H cabinet with 1 Adj. Shelf.

Actual product specifications may vary.

sales@atlcabinetry.com 770-685-1471 / 770-559-7593
3033 Adriatic Ct. Peachtree Corners, GA 30071 www.atlcabinetry.com

PRODUCT SPECIFICATIOBNS - Wall Cabinets

DOUBLE DOOR WALL CABINETS

	ITEM	DESCRIPTION	WIDTH	DEPTH	HEIGHT
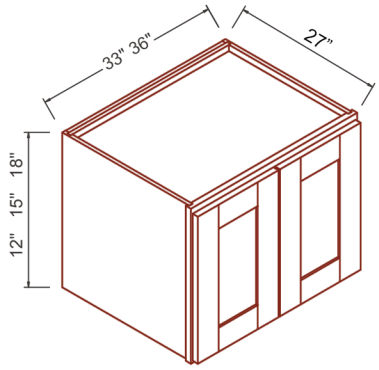	W331227	Cabinet Dimension	33	27	12
		Door Dimension	16 7/32	3/4	11 5/8
	W331827	Cabinet Dimension	33	27	12
		Door Dimension	17 3/4	3/4	11 5/8
	Note: 24" H Cabinet with 1 Adj. Shelf.				
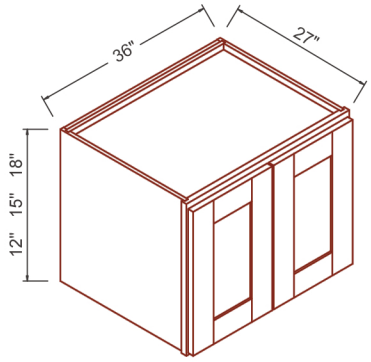	W361227	Cabinet Dimension	36	27	12
		Door Dimension	17 3/4	3/4	11 5/8
	W362427	Cabinet Dimension	36	24	21
		Door Dimension	17 3/4	3/4	14 5/8

Actual product specifications may vary.

sales@atlcabinetry.com 770-685-1471 / 770-559-7593
3033 Adriatic Ct. Peachtree Corners, GA 30071 www.atlcabinetry.com

PRODUCT SPECIFICATIOBNS - Wall Cabinets

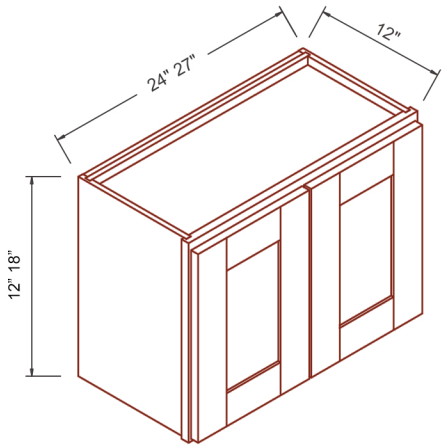

DOUBLE DOOR WALL CABINETS				
ITEM	DESCRIPTION	WIDTH	DEPTH	HEIGHT
W2412	Cabinet Dimension	24	12	12
	Door Dimension	11 3/14	3/4	17 5/8
W2712	Cabinet Dimension	27	12	12
	Door Dimension	13 7/32	3/4	17 5/8
W2418	Cabinet Dimension	24	12	18
	Door Dimension	11 3/14	3/4	17 5/8
W2718	Cabinet Dimension	27	12	18
	Door Dimension	13 7/32	3/4	17 5/8

Actual product specifications may vary.

sales@atlcabinetry.com 770-685-1471 / 770-559-7593
3033 Adriatic Ct. Peachtree Corners, GA 30071 www.atlcabinetry.com

PRODUCT SPECIFICATIOBNS - Wall Cabinets

DIAGONAL CORNER CABINETS

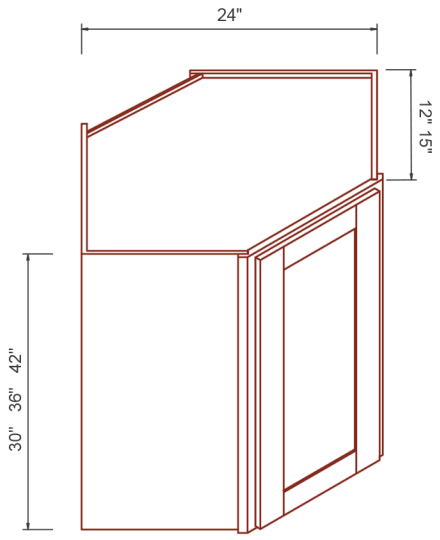

ITEM	DESCRIPTION	WIDTH	DEPTH	HEIGHT
DCW2430	Cabinet Dimension	24	12	30
	Door Dimension	15 13/32	3/4	29 5/8
DCW2436	Cabinet Dimension	24	12	36
	Door Dimension	15 13/32	3/4	35 5/8
DCW2442	Cabinet Dimension	24	12	42
	Door Dimension	15 13/32	3/4	41 5/8

Note: 30" H and 36" H cabinets with 2 Adj. Shelves; 42" H cabinets with 3 Adj Shelves.

DIAGONAL CORNER CABINETS

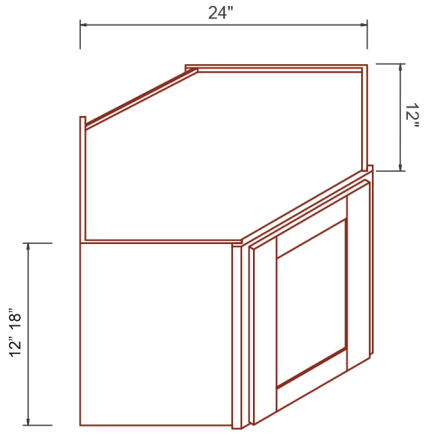

ITEM	DESCRIPTION	WIDTH	DEPTH	HEIGHT
DCW2412	Cabinet Dimension	24	12	12
	Door Dimension	15 13/32	3/4	17 5/8
DCW2418	Cabinet Dimension	24	12	18
	Door Dimension	15 13/32	3/4	17 5/8

Actual product specifications may vary.

sales@atlcabinetry.com 770-685-1471 / 770-559-7593
3033 Adriatic Ct. Peachtree Corners, GA 30071 www.atlcabinetry.com

PRODUCT SPECIFICATIOBNS - Wall Cabinets

WALL BLIND CORNER CABINETS

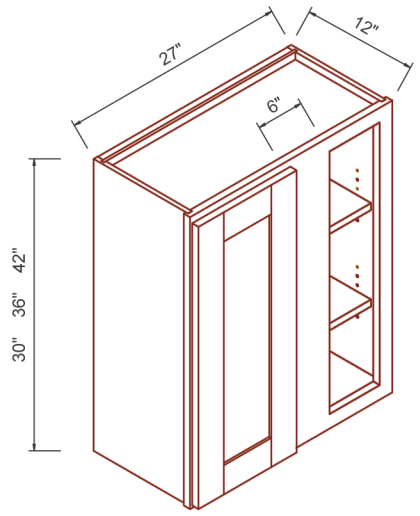

ITEM	DESCRIPTION	WIDTH	DEPTH	HEIGHT
WBC2730	Cabinet Dimension	27	12	30
	Door Dimension	11 3/4	3/4	29 5/8
WBC2736	Cabinet Dimension	27	12	36
	Door Dimension	11 3/4	3/4	35 5/8
WBC2742	Cabinet Dimension	27	12	42
	Door Dimension	11 3/4	3/4	41 5/8

Note: 30" H and 36" H cabinets with 2 Adj. Shelves; 42" H cabinets with 3 Adj Shelves.

WALL END OPEN SHELVES

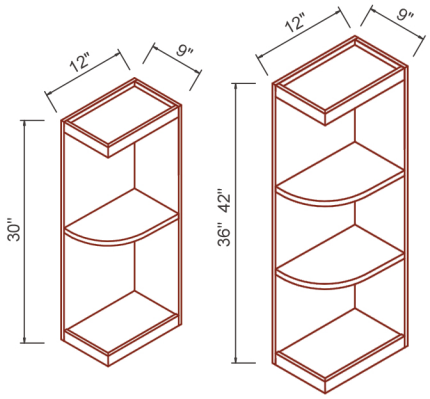

ITEM	DESCRIPTION	WIDTH	DEPTH	HEIGHT
OE0930	Cabinet Dimension	9	12	30
	Number of Shelves	1	1	1
OE0936	Cabinet Dimension	9	12	36
	Number of Shelves	2	2	2
OE0942	Cabinet Dimension	9	12	42
	Number of Shelves	2	2	2

Note: 1 Adj. Shelf for WES0930;
2 Adj. Shelves for WES0936-WES0942.

Actual product specifications may vary.

sales@atlcabinetry.com 770-685-1471 / 770-559-7593
3033 Adriatic Ct. Peachtree Corners, GA 30071 www.atlcabinetry.com

PRODUCT SPECIFICATIOBNS - Wall Cabinets

WINE RACK CABINETS WITH LATTICE PANELS					
	ITEM	DESCRIPTION	WIDTH	DEPTH	HEIGHT
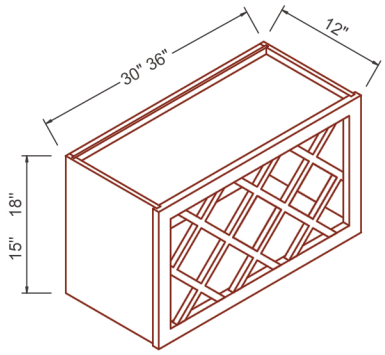	WR3015	Cabinet Dimension	30	12	15
	WR3018	Cabinet Dimension	30	12	18
	WR3615	Cabinet Dimension	36	12	15
	WR3618	Cabinet Dimension	36	12	18

Actual product specifications may vary.

sales@atlcabinetry.com 770-685-1471 / 770-559-7593
3033 Adriatic Ct. Peachtree Corners, GA 30071 www.atlcabinetry.com

PRODUCT SPECIFICATIOBNS - Molding & Decor

KNEE DRAWERS

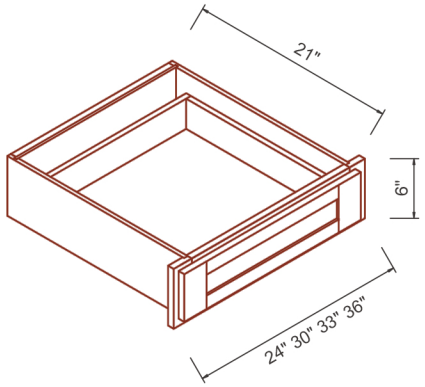

ITEM	DESCRIPTION	WIDTH	DEPTH	HEIGHT
VKD36	Cabinet Dimension	36	21	6
	Drawer Front	23 5/8	3/4	5 1/2

ROLL OUT DRAWERS

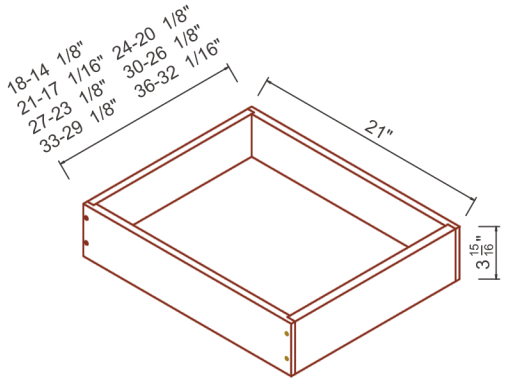

ITEM	DESCRIPTION	WIDTH	DEPTH	HEIGHT
RS18	Drawer Dimension	14 1/8	21	3 15/16
RS21	Drawer Dimension	17 1/16	21	3 15/16
RS24	Drawer Dimension	20 1/8	21	3 15/16
RS27	Drawer Dimension	23 1/8	21	3 15/16
RS30	Drawer Dimension	26 1/8	21	3 15/16
RS33	Drawer Dimension	29 1/8	21	3 15/16
RS36	Drawer Dimension	32 1/16	21	3 15/16

Actual product specifications may vary.

sales@atlcabinetry.com 770-685-1471 / 770-559-7593
3033 Adriatic Ct. Peachtree Corners, GA 30071 www.atlcabinetry.com

PRODUCT SPECIFICATIOBNS - Wall Cabinets

WALL DECORATIVE PANELS

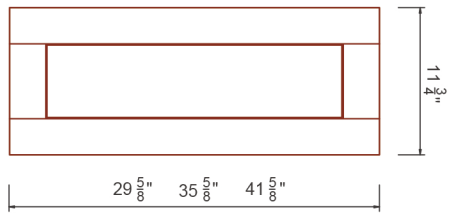

ITEM	DESCRIPTION	WIDTH	DEPTH	HEIGHT
WDEP30	Door Dimensions	11 3/4	3/4	29 5/8
WDEP36	Door Dimensions	11 3/4	3/4	35 5/8
WDEP42	Door Dimensions	11 3/4	3/4	41 5/8

WALL STEAM GLASS HANGERS

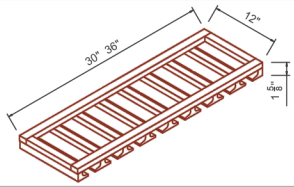

ITEM	DESCRIPTION	WIDTH	DEPTH	HEIGHT
SGH30	Cabinet Dimension	30	12	1 5/8
SGH36	Cabinet Dimension	36	12	1 5/8

Actual product specifications may vary.

sales@atlcabinetry.com 770-685-1471 / 770-559-7593
3033 Adriatic Ct. Peachtree Corners, GA 30071 www.atlcabinetry.com

PRODUCT SPECIFICATIOBNS - Molding & Decor

BASE FINISH PANELS-THICK

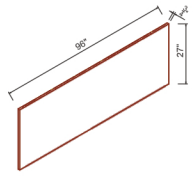

ITEM	DESCRIPTION	WIDTH	DEPTH	HEIGHT
S2796	Panel Dimensions	27	3/4	96

BASE FINISH SKIN PANELS

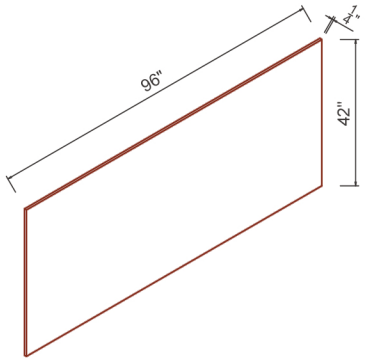

ITEM	DESCRIPTION	WIDTH	DEPTH	HEIGHT
FPV4296	Panel Dimensions	42	1/4	96

BEADED PLYWOOD FINISH PANEL

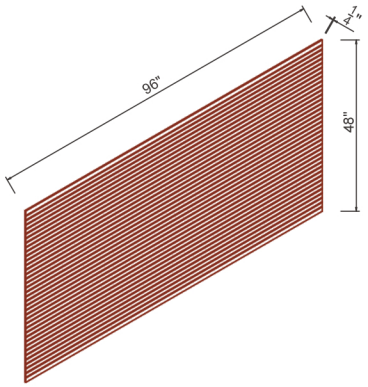

ITEM	DESCRIPTION	WIDTH	DEPTH	HEIGHT
BBFPV4296	Panel Dimensions	42	1/4	96

Actual product specifications may vary.

sales@atlcabinetry.com 770-685-1471 / 770-559-7593
3033 Adriatic Ct. Peachtree Corners, GA 30071 www.atlcabinetry.com

PRODUCT SPECIFICATIOBNS - Molding & Decor

DISHWASHER END PANEL

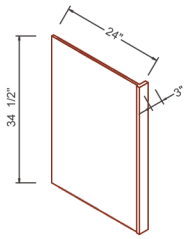

ITEM	DESCRIPTION	WIDTH	DEPTH	HEIGHT
DWR	Panel Dimensions	24	1/2	34 1/2
	Filler Dimensions	3	1/2	34 1/2

REFRIGERATOR END PANELS

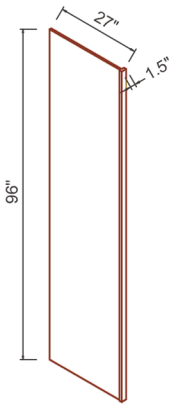

ITEM	DESCRIPTION	WIDTH	DEPTH	HEIGHT
REPV2796	Panel Dimensions	27	1/2	96
	Filler Dimensions	3	1/2	96

TOE-KICK

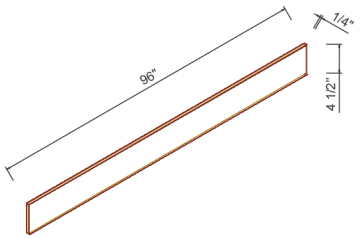

ITEM	DESCRIPTION	WIDTH	DEPTH	HEIGHT
TKC	Filler Dimensions	4 1/2	1/4	96

Actual product specifications may vary.

sales@atlcabinetry.com 770-685-1471 / 770-559-7593
3033 Adriatic Ct. Peachtree Corners, GA 30071 www.atlcabinetry.com

PRODUCT SPECIFICATIOBNS - Molding & Decor

WALL FILLERS

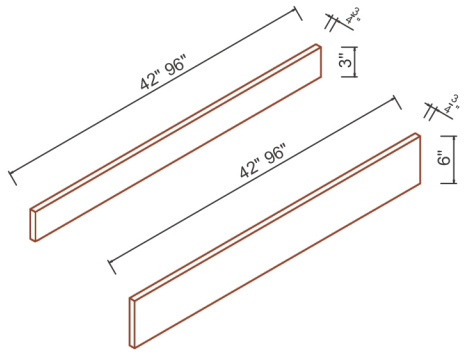

ITEM	DESCRIPTION	WIDTH	DEPTH	HEIGHT
WF342	Filler Dimensions	3	3/4	42
WF396	Filler Dimensions	3	3/4	96
WF642	Filler Dimensions	6	3/4	42
WF696	Filler Dimensions	6	3/4	96

CORBELS

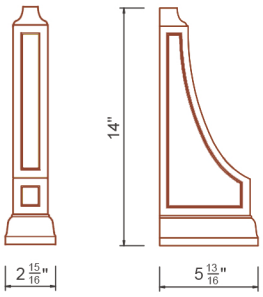

ITEM	DESCRIPTION	WIDTH	DEPTH	HEIGHT
CBT	Countertop Support	3	6	12 3/4

TKC

Actual product specifications may vary.

sales@atlcabinetry.com 770-685-1471 / 770-559-7593
3033 Adriatic Ct. Peachtree Corners, GA 30071 www.atlcabinetry.com

PRODUCT SPECIFICATIOBNS - Molding & Decor

DECORATIVE LEGS

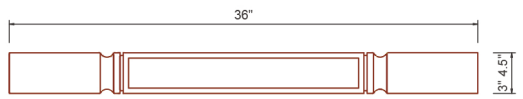

ITEM	DESCRIPTION	WIDTH	DEPTH	HEIGHT
CLDL	Decorative Legs	3	3	36

VALANCE BRIDGES

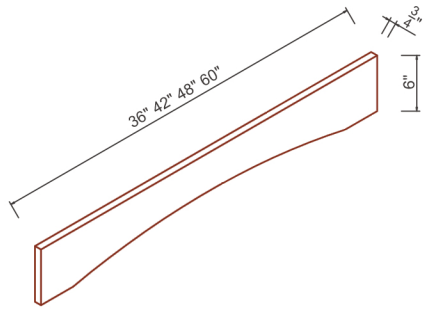

ITEM	DESCRIPTION	WIDTH	DEPTH	HEIGHT
VA30	Dimension	30	3/4	6
VA36	Dimension	36	3/4	6
VA42	Dimension	42	3/4	6
VA48	Dimension	48	3/4	6
VA54	Dimension	54	3/4	6
VA60	Dimension	60	3/4	6

Actual product specifications may vary.

sales@atlcabinetry.com 770-685-1471 / 770-559-7593
3033 Adriatic Ct. Peachtree Corners, GA 30071 www.atlcabinetry.com

PRODUCT SPECIFICATIOBNS - Molding & Decor

COVE MOLDINGS

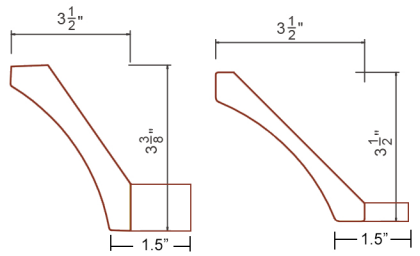

ITEM	DESCRIPTION	WIDE	DEPTH	LONG
COV	Dimensions	3 1/2	3 1/2	96
COV3	Dimensions	3 3/8	2 1/2	96

SCRIBE MOLDING

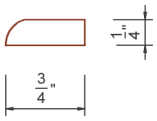

ITEM	DESCRIPTION	WIDE	DEPTH	LONG
SCR	Dimensions	3/4	1/4	96

BASE FUNITURE MOLDING

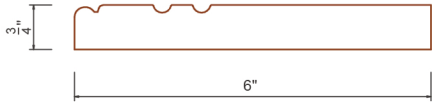

ITEM	DESCRIPTION	WIDE	DEPTH	LONG
FBM	Dimensions	6	3/4	96

Actual product specifications may vary.

sales@atlcabinetry.com 770-685-1471 / 770-559-7593
3033 Adriatic Ct. Peachtree Corners, GA 30071 www.atlcabinetry.com

PRODUCT SPECIFICATIOBNS - Molding & Decor

TRADITIONAL LIGHT RAIL MOLDING

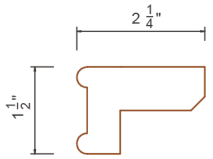

ITEM	DESCRIPTION	WIDE	DEPTH	LONG
LRM	Dimensions	1 5/8	2 1/4	96

QUARTER ROUND MOLDING

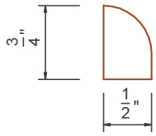

ITEM	DESCRIPTION	WIDE	DEPTH	LONG
SHM	Dimensions	3/4	1/2	96

OUTSIDE CORNER MOLDING

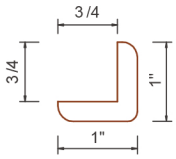

ITEM	DESCRIPTION	WIDE	DEPTH	LONG
OCM	Dimensions	1	1	96

Actual product specifications may vary.

sales@atlcabinetry.com 770-685-1471 / 770-559-7593
3033 Adriatic Ct. Peachtree Corners, GA 30071 www.atlcabinetry.com

PRODUCT SPECIFICATIOBNS - Accessories

TOUCH UP KITS / SPRAY CANS		
	ITEM	DESCRIPTION
	TOUCH KIT	PUTTY STIK, MARKER PEN
	SPRAY CAN	LACQUER 7.6 OZ CAN

PUTTY STICKS / PASTES		
	ITEM	DESCRIPTION
	EDA PUTTY STICK	PUTTY STIK

Actual product specifications may vary.